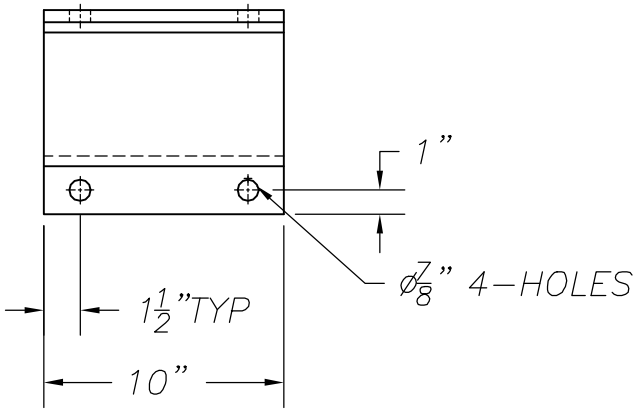

TOP VIEW

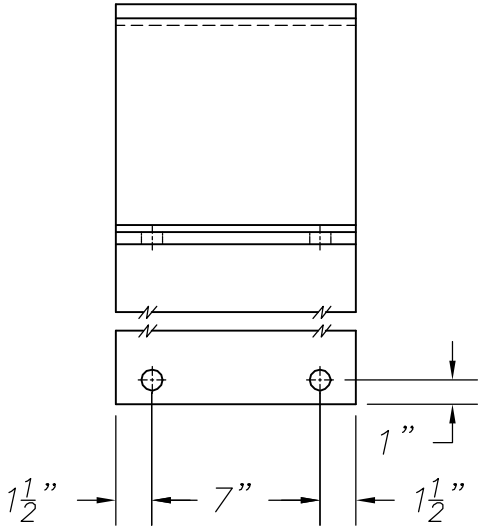

FRONT VIEW

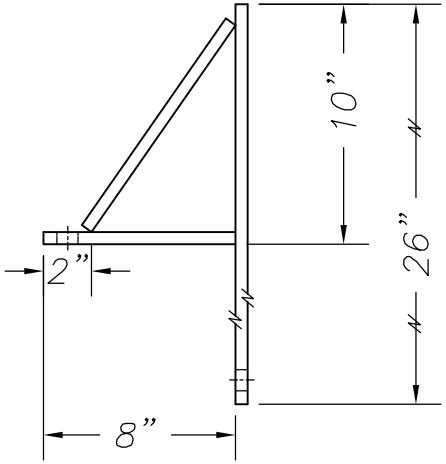

RIGHT SIDE VIEW

NOTES:

IF DOCK BUMPER MUST BE WELDED TO BRACKET SPECIFY "WELD" ON ORDER.
"P2" STYLE DOCK BUMPER MUST BE ORDERED IF WELDING TO BRACKET IS REQUIRED.

STEEL BRACKETING SPECIFICATIONS: 1/2" STEEL STANDARD
ALL MOUNTING HOLES ARE: 7/8" DIAMETER

ALL TOLERANCES ARE ± 1/8" UNLESS OTHERWISE NOTED.

ESTIMATED GROSS SHIPPING WEIGHT= 62 lbs.

REV.	DESCRIPTION	DATE	BY

THIS DRAWING AND THE DESIGN SHOWN ARE THE PROPERTY OF TMI INCORPORATED. REPRODUCTION OR USE OF THIS DRAWING FOR ANY PURPOSE OTHER THAN THAT SPECIFIED SHALL BE VIEWED AS INFRINGEMENT AND BE SUBJECT TO LEGAL ACTION.

TMI INC.
TMI incorporated
5350 Campbells Run Road.
Pittsburgh, PA 15205-9738

SCALE: 1:96	TMI inc. Appr.:	DATE:
DRAWN BY: A. Iaizzo	TMI inc. Appr.:	DATE:
TITLE 10"-ABOVE DOCK BUMPER RISER B'KT		
DATE: 12.2002	PART NO. 28-1003	

File:\STEEL BRACKETS\28-1003