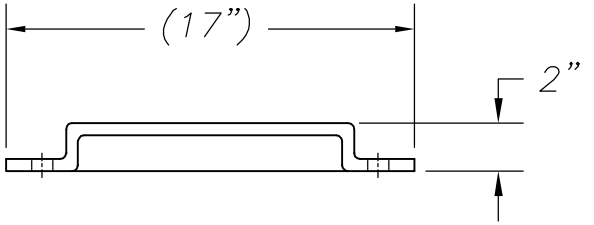

TOP VIEW

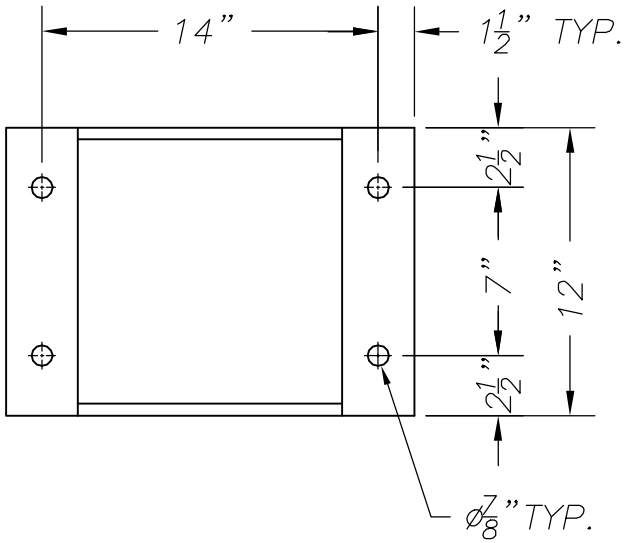

FRONT VIEW

NOTES:

IF DOCK BUMPER MUST BE WELDED TO BRACKET SPECIFY "WELD" ON ORDER.
"P2" STYLE DOCK BUMPER MUST BE ORDERED IF WELDING TO BRACKET IS REQUIRED.

ALL TOLERANCES ARE ± 1/8" UNLESS OTHERWISE NOTED.

ESTIMATED GROSS SHIPPING WEIGHT= 12 lbs.

REV.	DESCRIPTION	DATE	BY

THIS DRAWING AND THE DESIGN SHOWN ARE THE PROPERTY OF TMI INCORPORATED. REPRODUCTION OR USE OF THIS DRAWING FOR ANY PURPOSE OTHER THAN THAT SPECIFIED SHALL BE VIEWED AS INFRINGEMENT AND BE SUBJECT TO LEGAL ACTION.

TMI incorporated
5350 Campbells Run Road.
Pittsburgh, PA 15205-9738

SCALE: 1:96	TMI inc. Appr.:	DATE:
DRAWN BY: A. Iaizzo	TMI inc. Appr.:	DATE:
TITLE 2"x12" DOCK BUMPER BUILD-OUT BRKT		
DATE: 12.2002	PART NO. 28-2002	

File:\STEEL BRACKETS\28-2001