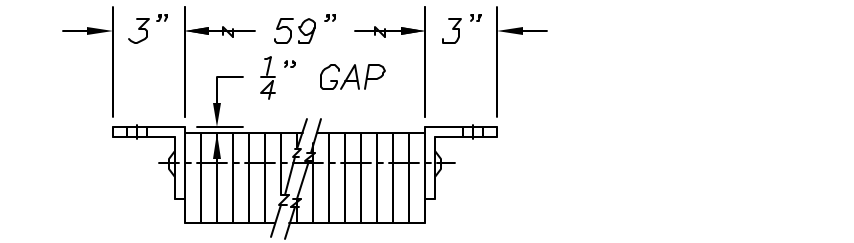

TOP VIEW

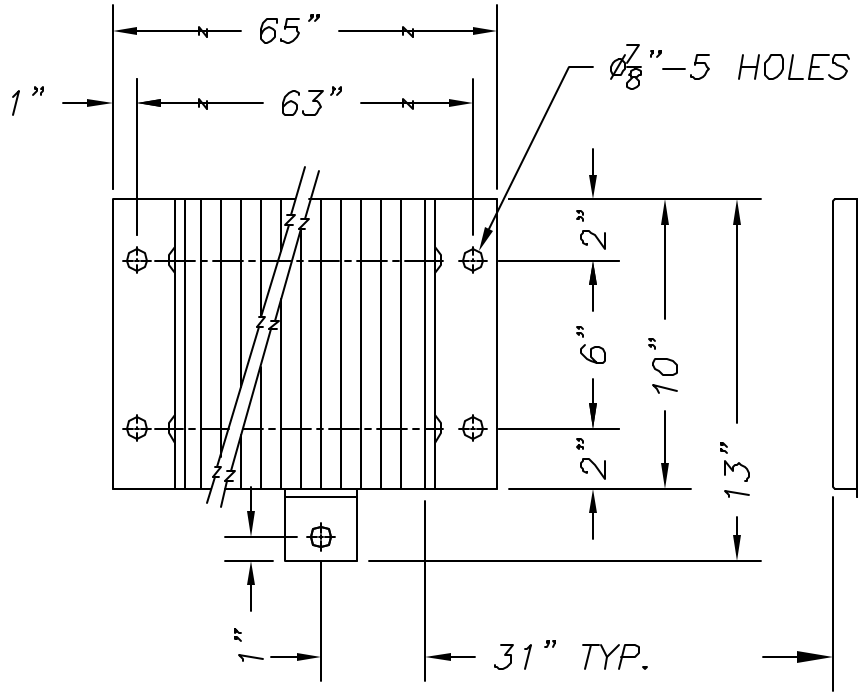

FRONT VIEW

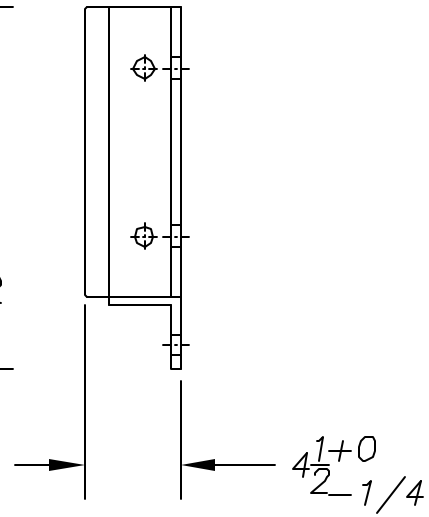

RIGHT SIDE VIEW

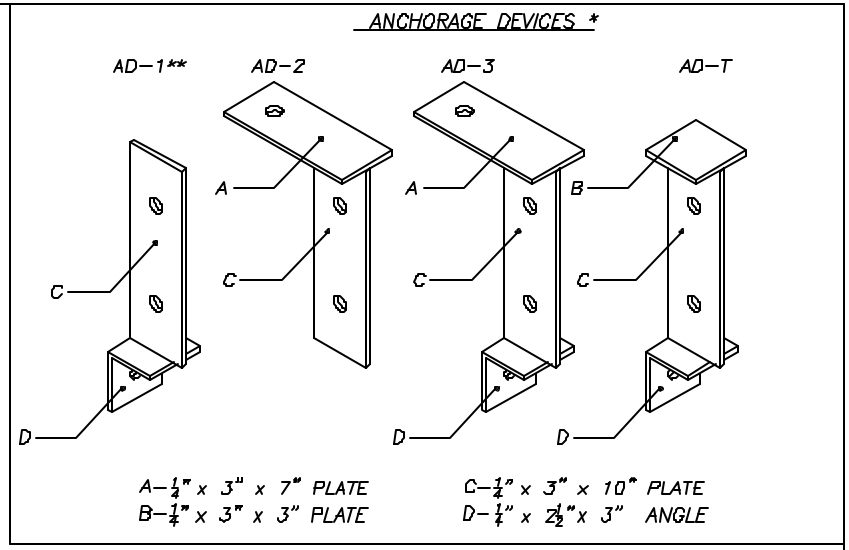

NOTES:
UNIT SHOWN IS "ANGLES BOTH SIDES" (B41065)

STANDARD "P1" CONFIGURATION (B41065/P1)
IS ANGLE ONE SIDE, FLAT ON OTHER,
FOR WELDING TO DOCK FACE ON ONE SIDE
AND ANCHORING TO DOCK FACE ON THE OTHER.

"P2" CONFIGURATION (B41065/P2)
IS FLAT BOTH SIDES FOR WELDING
TO DOCK FACE ON BOTH SIDES.

ALL TOLERANCES ARE ± 1/8"
UNLESS OTHERWISE NOTED.

ESTIMATED GROSS SHIPPING WEIGHT= 126 lbs.

*NUMBER OF ANCHORAGE DEVICE = 1
**AD–1 STYLE USED UNLESS OTHERWISE SPECIFIED.

REV.	DESCRIPTION	DATE	BY

THIS DRAWING AND THE DESIGN SHOWN ARE THE PROPERTY OF TMI INCORPORATED. REPRODUCTION OR USE OF THIS DRAWING FOR ANY PURPOSE OTHER THAN THAT SPECIFIED SHALL BE VIEWED AS INFRINGEMENT AND BE SUBJECT TO LEGAL ACTION.

TMI incorporated
5350 Campbells Run Road,
Pittsburgh, PA 15205–9738

SCALE: 1:96	TMI Inc. Appr.:	DATE:
DRAWN BY: A. Iaizzo	TMI Inc. Appr.:	DATE:
TITLE: B410x65–AD*		
DATE: 09.2002	PART NO.	

File:\EXTRA WIDTH LAMINATED\B41065